Summary of AC Asynchronous Motor Starting Methods

Wenming Ma[a*] and Wutao Lu[b]

Xijing University, Xi'an 710123, China

[a*]987746606@qq.com; [b]1422881802@qq.com

Keywords: Soft start, Mechanical start, Soft start of thyristor, Inverter start

Abstract. Here are the various ways to start soft-start of AC motors, from the earliest mechanical start-up methods to electronic thyristor soft-starts and frequency converters, and outline the advantages and disadvantages of these start-up methods. The key point is to introduce the intelligent and operability of thyristor soft start and inverter start mode. Through more detailed comparison, it is concluded that the inverter is not suitable for general soft starter, and the thyristor soft starter is the best for the current conventional motor.

Introduction

The traditional mechanical soft start mode has been eliminated. The inverter is difficult to be practically applied in the field of motor soft start at high price. The electronic thyristor soft starter is characterized by its low price, high reliability and non-damage. Widely accepted, but the small starting torque limits its application range. The discrete frequency conversion surface based on the cycle control seems to be feasible. In-depth analysis shows that it has defects in principle, not only the starting current is large, but also the purpose of increasing the starting torque is not achieved. At this time, a large number of harmonics were introduced, resulting in a very serious torque ripple phenomenon of the motor. Therefore, in order to improve the working performance of the electronic thyristor soft starter and increase the motor starting torque, it is necessary to study a high-starting torque asynchronous motor variable frequency soft start method.

AC Asynchronous Motor Start Request

China has special use specifications for the start-up of high-power asynchronous motors. For details, please refer to the "General-purpose Power Equipment Power Distribution Design Specifications", which clearly states:

1) The starting torque at the start of the motor should meet the requirements of the starting load and should not affect the use of other electrical equipment.

2) The AC motor starting process voltage is divided by the starting frequency, and the minimum can not be lower than 80% of the rated value[1].

3) The squirrel cage motor should be selected according to the actual situation, even if the full pressure start is required to meet the safety of the motor and the power grid and ensure that the production is not damaged.

4) Rotor winding motor starting requirements are relatively high, often need to be activated by frequency sensitive resistors or resistors[2].

Mechanical Soft Start Mode

Since the asynchronous motor began to enter industrial applications, the auxiliary soft start device of the motor was born. Early soft-start devices were mainly mechanical, such as: frequency sensitive resistors, stator or rotor string resistors or reactor buck, star-delta conversion, extended-edge triangle, autotransformer and magnetically controlled soft-start, etc. The motor stator voltage is reduced internally or externally to reduce the starting current. However, if the starting current is limited only by reducing the stator voltage without frequency conversion, the torque is

  DOI: 10.25236/icicta.2019.005

insufficient, which limits the application range of these methods. The rotor string resistor or reactor can increase the starting torque of the motor to a certain extent, and the starting current is not too high. However, the general wound or squirrel-cage asynchronous motors are all internal rotor motors, which are difficult to change not only in practical applications, but also increased rotor motors are only useful during motor starting. Once the motor is started, it is necessary to restore the rotor resistance value, which will cause the secondary impact current of the motor, and the operation difficulty will increase abruptly and the risk factor is high [3].

However, some mechanical soft start methods are still used in some industries because of their reliability, ease of use and economy, such as the mechanical soft start method below.

1) Frequency sensitive resistor

The frequency sensitive varistor is a new type of power device without contacts that is made up of iron or steel plates. It is connected in series in the circuit of the rotor winding. The equivalent reactance of the winding changes with the rotor current frequency. When the rotor speed is very low, the rotor current frequency is approximately equal to the power frequency, and the equivalent reactance is larger. As the speed increases, the rotor current increases. The frequency approaches and the slip frequency, and the rotor equivalent reactance decreases. The frequency sensitive varistor is actually a method of smoothly adjusting the rotor speed to gently reduce the total resistance of the rotor circuit. When the start is completed, the rotor winding is shorted and the frequency sensitive resistor is bypassed[4].

Advantages: simple structure, low cost, improved starting torque and lower pressure, and smoother motor starting.

Disadvantages: Increased loop inductance and reduced power factor, suitable for light-duty starting of wound-wire motors.

2) Stator string resistance or reactor

The purpose of the stator winding series resistor or reactor is to reduce the current limit. When the motor is started, the stator stator power supply terminal is connected to the resistor to reduce the stator winding voltage and reduce the stator winding voltage. The starting current. After the motor is started, short-circuit the resistor or reactor to make the motor work normally at the rated voltage of the power frequency. This method of step-down startup is inefficient, and a part of the power in the startup process is wasted in the form of heat loss on the series resistor reactor, so this method is rarely used in practice[5].

Advantages: The motor starting torque is large and the starting is relatively stable.

Disadvantages: The power utilization efficiency is low, and the bypass process has the problem of secondary impact of the motor.

3) Star Delta Transformation

The star-delta transformation is to apply different voltages to the three-phase winding of the motor during startup and normal operation to reduce the inrush current when the motor starts. At the start-up, a star-connected power supply is applied to the motor windings, that is, the three live wires of the power supply are respectively connected to one end of the three windings of the motor, and the other end of the three windings of the motor is connected to the neutral line of the power supply. At this point, the voltage that each winding of the motor is subjected to is 220V, so the current is significantly reduced at startup, which weakens the impact on the grid, and the motor starts easily. When the motor is started, the three circuits of the motor are changed to be connected end to end by the control circuit through the control of the time relay and the contactor, and converted into a delta connection. The voltage of the motor winding becomes 380V, and the motor can work at full load[6].

Advantages: The motor starts smoothly and is economical and practical.

Disadvantages: The secondary impact motor is large and the starting torque is low.

4) Autotransformer

The autotransformer is a special transformer with the same winding on the primary and secondary sides. By using different taps to achieve boost and buck functions, the buck tap has fewer winding coils than the shared winding coil, and the boost tap has more winding coils than the shared winding coil. The principle is basically the same as that of the ordinary transformer, except that the

primary coil and the secondary coil are the same coil, and the general transformer is the original coil on the left side. The electromagnetic induction causes the voltage of the right secondary coil to generate voltage, but the autotransformer is sensing itself Voltage[7].

Advantages: The autotransformer has less consumables than ordinary transformers, low cost and small floor space.

Disadvantages: The short-circuit current increases, the voltage regulation is difficult, the protection is complicated, and the starting torque is low.

5) Magnetically controlled soft start

The magnetically controlled soft start device is connected with a magnetic saturation reactor in the stator circuit of the motor, and then closed-loop control adjusts the magnitude of the direct current in the winding of the reactor to change the magnetic permeability of the core in the reactor, thereby changing the impedance of the coil of the primary winding. The size makes the impedance of the reactor continuously change from large to small within a preset time, and the voltage of the motor terminal gradually rises to full pressure to realize soft start of the motor[8].

Advantages: good controllability, small starting current, no secondary inrush current, small size, maintenance-free.

Disadvantages: complicated operation and low starting torque.

Electronic Soft Start Mode

Soft start based on three opposite parallel thyristors. Electronic soft starters have emerged with the rapid development of power electronics and microprocessor technology. The early power electronic power devices were mainly thyristors, which can withstand large overcurrents and high reliability. Applied to the field of motor control. In the 1970s, a motor starting device controlled by three opposite parallel thyristors appeared. After years of development, it was defined as a thyristor soft starter, which is a kind of high-power induction motor soft start, soft parking, light load energy saving and more A new type of motor control device that integrates automatic detection and protection functions. The thyristor soft starter not only realizes the smooth and shock-free start of the motor, but also can manually or automatically adjust the parameters of the starting process according to the characteristics of the motor starting load, thereby achieving the purpose of reducing the starting current, preventing the motor from stalling or accelerating the starting of the motor. At the same time, the electronic thyristor soft starter also has a variety of motor detection and protection functions, such as phase sequence detection, phase loss detection, overvoltage or undervoltage detection, overcurrent detection and protection, overload detection, etc., and detects faults[9]. After that, corresponding protection actions can be made according to the severity of the fault, which solves the problem that the conventional mechanical buck soft starter has always existed. With the gradual maturity of the technology, the electronic soft starter has been widely used in the field of motor dragging and achieved good results [31]. The main circuit of the thyristor soft starter is shown in Figure1.

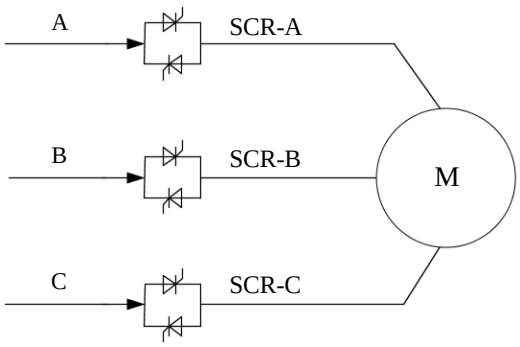

Fig 1. Main circuit schematic of thyristor soft starter

The main circuit of the soft starter is composed of three opposite parallel thyristors. Other parts include thyristor drive circuit, microprocessor system, three-phase voltage detection circuit, current detection circuit, temperature detection and protection circuit, communication and display circuit.

With the rapid development and wide application of micro-processing technology, soft starters have the premise of programmable intelligent implementation, and more intelligent technologies are rapidly developing[10].

The advantages of the electronic thyristor soft starter are as follows: 1)The motor starting voltage can be increased with a constant slope, thereby reducing the starting surge current and reducing the mechanical impact on the load; 2)The starting voltage increase slope is variable, which ensures the smoothness of the starting voltage, and the starting voltage can be continuously adjusted according to the load; 3)You can flexibly set the startup time according to the usage;4)soft starter combines multiple starting methods and detection and protection of the motor.

The thyristor soft starter also has unavoidable disadvantages: 1)The thyristor voltage regulator soft start is still a step-down start, and the starting torque is low; 2)After the thyristor chopping, the harmonic content of the power grid is increased.

Inverter soft start based on full control device. Since the 1980s, with the advent of full-control devices, inverter technology has entered the fast lane of development. In order to obtain the control performance of AC motor similar to DC motor, German scholars K Hass and FBlaschke first proposed a vector frequency conversion technology based on DQ axis theory, which is to decompose the current of AC motor into D axis excitation current and Q axis torque current, which is equivalent to The excitation current and torque current of the motor are independently decoupled and adjusted to obtain the control characteristics of the DC motor. The vector control technology significantly improves the control performance of the AC motor [31].

The birth of vector inverters is a major breakthrough in industrial technology. Soon after, German and Japanese scholars successfully realized the practical application of direct torque control, and quickly applied it to weak magnetic control to broaden the application field of direct torque control. Direct torque control generates large torque ripple at low speed. In order to reduce torque ripple and improve motor starting performance, industry scholars have proposed many new improved control algorithms to improve the low speed performance of the speed control system. As shown in Figure2.

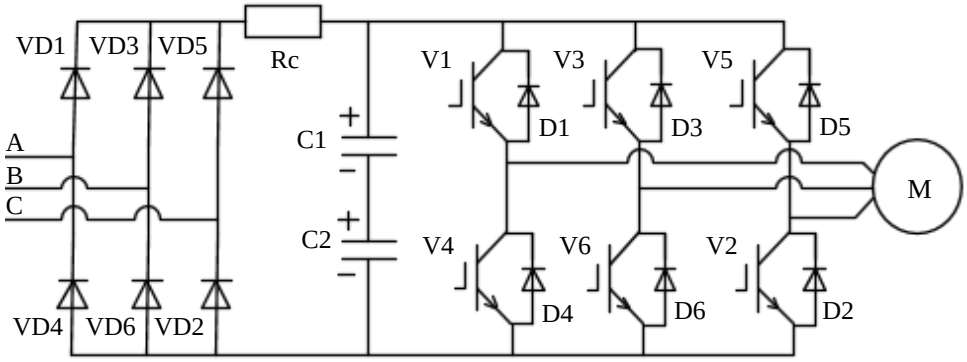

Fig 2. Main circuit structure diagram of general inverter

The main circuit of the inverter is shown in Figure2, and then filtered by the RC. The reactor is filtered by the commonly used reactor in the high-power inverter. The filtered voltage is inverted into frequency and amplitude by 6 fully-controlled devices. An adjustable AC voltage drives the induction motor.

The inverter is used for AC motor soft start has natural advantages: 1)The inverter can realize variable voltage variable frequency stepless speed regulation, which can not only achieve no overcurrent start, but also provide 1.2~2 times rated torque starting torque. 2)Harmonic pollution is less, and the power factor of the starting process is higher. 3)soft start inverter power device capacity is small, small size. 4)Inverter is especially suitable for large-scale mechanical equipment with heavy-load starting or full-load starting, such as high-power high-pressure fans in wind power field, industrial large compressors, etc.

At the same time, the inverter is also used for the soft start of AC motor. It also has the natural disadvantages: 1)The IGBT overload current capability of the full control device in the inverter is poor, which significantly increases the price. 2)Inverters are expensive and not suitable for some applications where speed regulation is not critical.

Comparison of Soft Start Modes of AC Asynchronous Motors

It can be seen from the previous analysis that the soft start technology of AC asynchronous motor is continuously updated with the advancement of technology, and the speed control system has been greatly improved. Each of the various starting methods has its own advantages and disadvantages. The mechanical soft-starting method is more and more inappropriate for the modern industry, and it is on the verge of industrial elimination. The frequency converter has innate advantages in the field of high-performance speed regulation, but in the soft start of the motor, due to its high price, the device capacity is small and it is difficult to practically apply. The soft start of thyristor is low in price, high in reliability, performance has been continuously improved, and the degree of intelligence is good. It is developing towards the direction of frequency conversion. The soft start of thyristor is still the most cost-effective starting method in motor starting. The comparison of several soft start modes in the industry is shown in Table 1.

Table 1 Comparison table of basic performance for various soft start modes

	Thyristor	Frequency converter	Magnetically controlled soft start	Autotransformer	Y-△ starter	Stator string resistance	Frequency sensitive resistor
Starting torque（%）	Adjustable	Adjustable	—	45~50%	60	—	45~50%
Overload capability	Weak	Very strong	Strong	Strong	Weak	Strong	Strong
Starting current	1.5~6Ie	0~2Ie	—	1.6~4Ie	1.8~2.5Ie	1.5~6Ie	1.6~4Ie
Grid voltage drop（%）	Larger	Very small	Poor	Smaller	Larger	Smaller	Smaller
Start/stop process smoothness	Good	Good	Better	Poor	Poor	Poor	Poor
High harmonic content	Poor	Smaller	Smaller	No	No	No	No
Price (low pressure)	Higher	Very high	High	High	Low	Low	High
Price (high pressure)	High	Very high	Higher	High	Low	Low	High

Allow start frequency	Higher	Higher	Higher	Lower	High	Lower	Lower
volume and weight	Small	Better	Lower	Better	Low	Better	Better
Control speed	Fast	Fast	Slower	Can not control	Can not control	Can not control	Can not control
Environmental adaptability	Better	Better	Better	Good	Good	Good	Good
Repeated startup consistency	Good	Good	Good	Good	Good	Good	Good
Start/stop mode	Many	Many	Many	Single	Single	Single	Single
Adaptability to load	Good	Good	Good	Poor	Poor	Poor	Poor
Convenience of parameter adjustment	Good	Good	Good	Poor	Not adjustable	Not adjustable	Poor
Comprehensive protection	Have	Have	Have	No	No	No	No
noise	No	No	Big	Small	No	No	Small
Dissipated power	Smaller	Smaller	Larger	Smaller	No	Big	Smaller
Auxiliary power	<50W	<50W	Big	No	No	No	No
Communication function	Have	Have	Have	No	No	No	No
reliability	High	High	High	High	High	High	High
Installation and maintenance	Convenience	Convenience	Convenience	Convenience	Convenience	Convenience	Convenience
Number of motor external wiring	3 roots	3 roots	3 roots	3 roots	6 roots	3 roots	3 roots

Conclusion

The traditional soft starter is based on the principle of voltage regulation and speed regulation, and reduces the starting current by chopper method to reduce the starting current. However, this method has inherent defects of small starting torque. Although the discrete frequency conversion soft starter theoretically adopts the principle of frequency conversion speed regulation, which has a substantial improvement in improving the starting torque, it still fails to fundamentally solve the resulting harmonic torque. The problem of current reduction. Therefore, from the purpose of control, rethinking and introducing new methods and technical routes is the only way to fundamentally solve the problem of soft start.

Summary

Here are the various ways to start soft-start of AC motors, from the earliest mechanical start-up methods to electronic thyristor soft-starts and frequency converters, and outline the advantages and disadvantages of these start-up methods. The key point is to introduce the intelligent and operability of thyristor soft start and inverter start mode. Through more detailed comparison, it is concluded that the inverter is not suitable for general soft starter, and the thyristor soft starter is the best for the current conventional motor. Startup method.

References

[1] Q.M.Cheng,Y.M.Cheng,Y.F.Wang.A review of the development of AC motor control strategies[J].Power system protection and control,2011,39(9):145-154.

[2] K.Liu,J.Rong and N.Song.Application of Three-phase AC Voltage Regulation Circuit in Soft Start of Asynchronous Motor[J]. Electronic technology,2016,29(2)：163-166.

[3] J.Q.Liu.Application of High Pressure Soft Starter System for Coal Mine Underground Pump[J].Coal and chemical industry,2015,38(12):93-95.

[4] Nied N,de Oliveira J,de Farias Campos R,et al. Soft Starting of Induction Motor With Torque Control[J].IEEE Transactions on Industry Application,2010,46(3):1002-1010.

[5] T.Feng,J.Wang.Speed Control Based on Stator Voltage Space Vector Induction Motor[J].Journal of Electrotechnics,2014,29(1):123-130.

[6] Donghui L, Xiaobin D. Research on Discrete Variable Frequency soft starting and electricity-economizing control system of induction motor[C]. International Conference on Electric Information and Control Engineering. IEEE,2011：4391-4394.

[7] Gorbunov R L, Poskonnyy G I. Symmetrical discrete frequency control for AC-chopper with mutual switching function[C]. Micro nanotechnologies and Electron Devices,International Conference of Young Specialists on. IEEE,2014：353-358.

[8] Y.J.Meng,X.X.Gao and L.T.Li. Soft starter programming based on STM32 [J].Electronic device, 2013, 36(05):685-689.

[9] Y.J.Meng,J.Chen and Z.Y.Gao.Induction Discrete Variable Frequency Fast Soft Start Research[J].Journal of Shaanxi University of Science and Technology,2016,34(2):154-159.

[10] D.H.Wu, Z.L.Liu and X.H.Xiao. A PWM Method of Magnetic Chain Trajectory Tracking and Its Characteristic Analysis [J].Journal of Electric Machines and Control, 2013, 17 (06): 107-116.